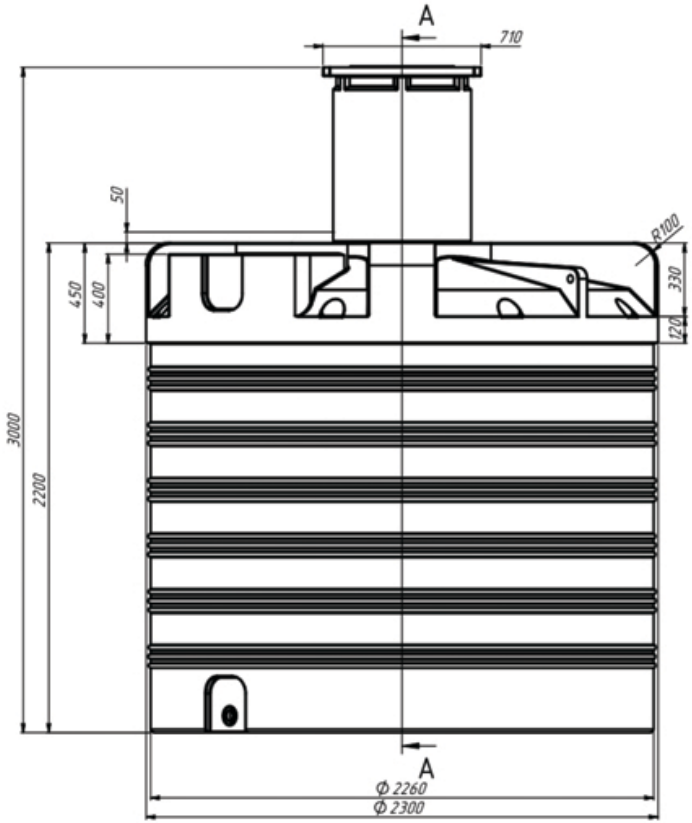

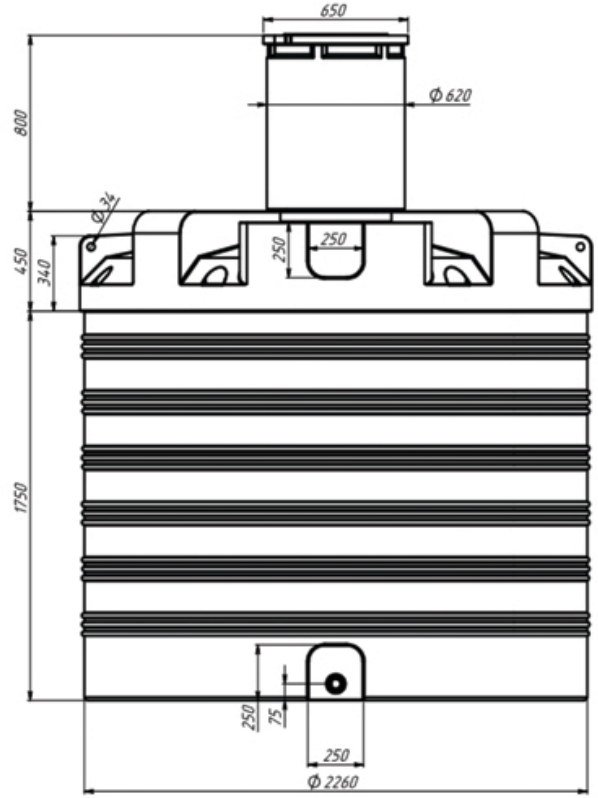
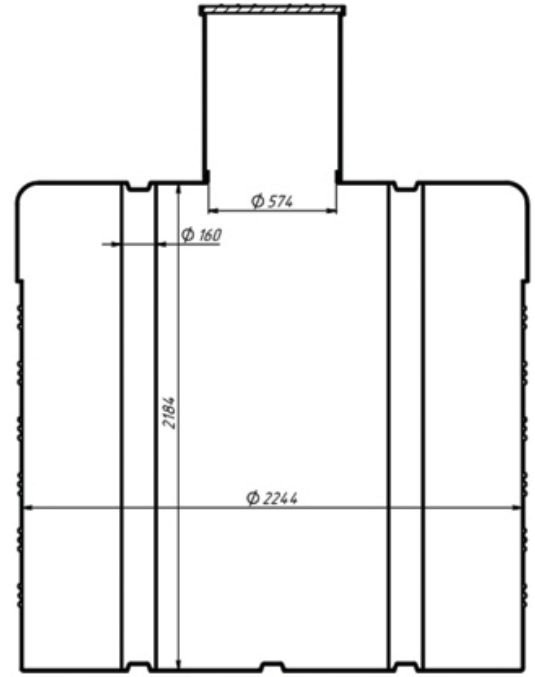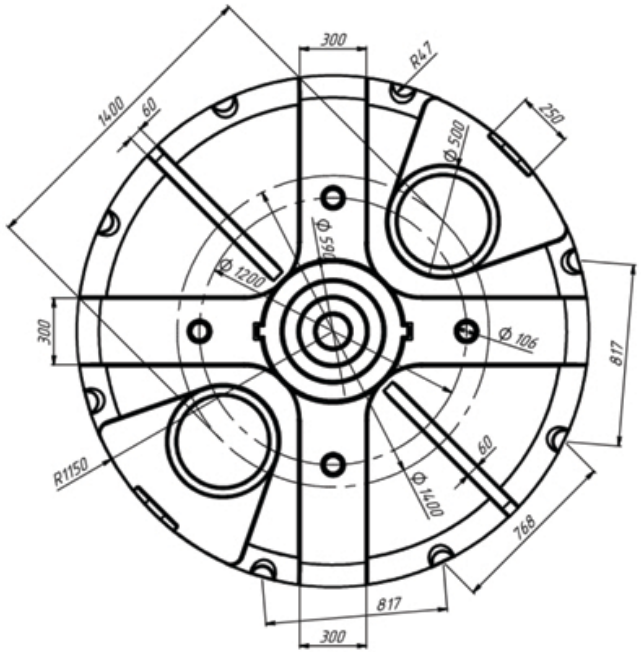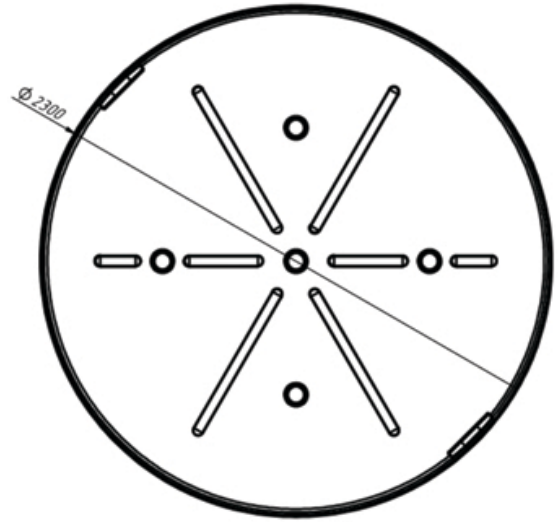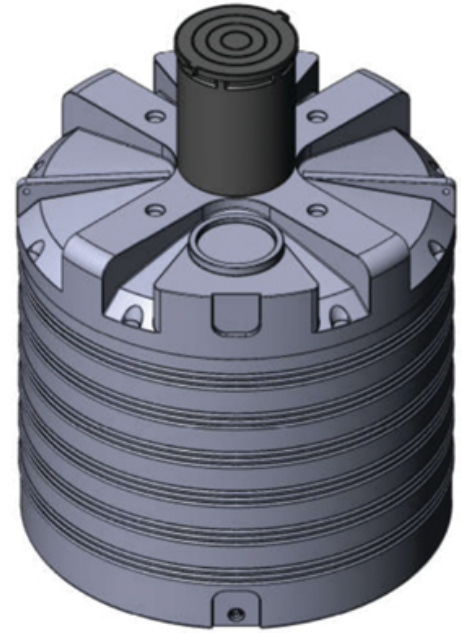
CROSS-SECTION A-A
SCALE 1:12